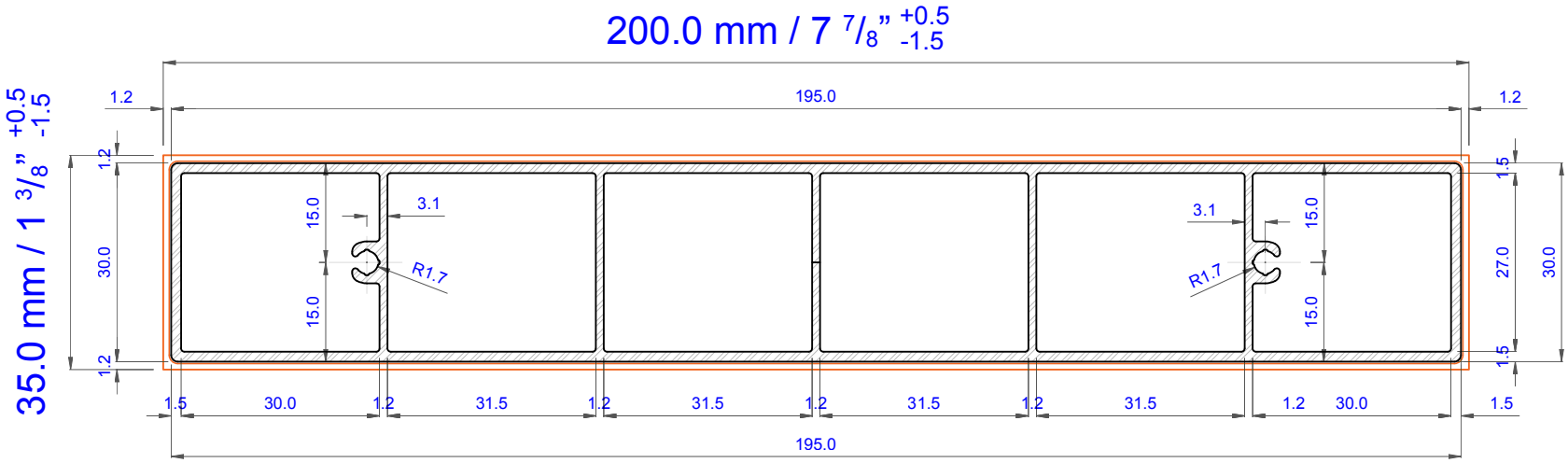

Technical specifications, dimensions in mm		Cross section coefficient Z+x (cm^3)	8.92	**Wood hybrid system WHS**	Type 1.0
Weight (kg/ml)	3.30	Cross section coefficient Z-x (cm^3)	8.92	**Soleo 6033**	Geolam www.geolaminc.com
Cross section, secondary moment Ix (cm^4)	13.38	Cross section coefficient Z+y (cm^3)	31.74		
Cross section, secondary moment Iy (cm^4)	308.35	Cross section coefficient Z-y (cm^3)	31.74		