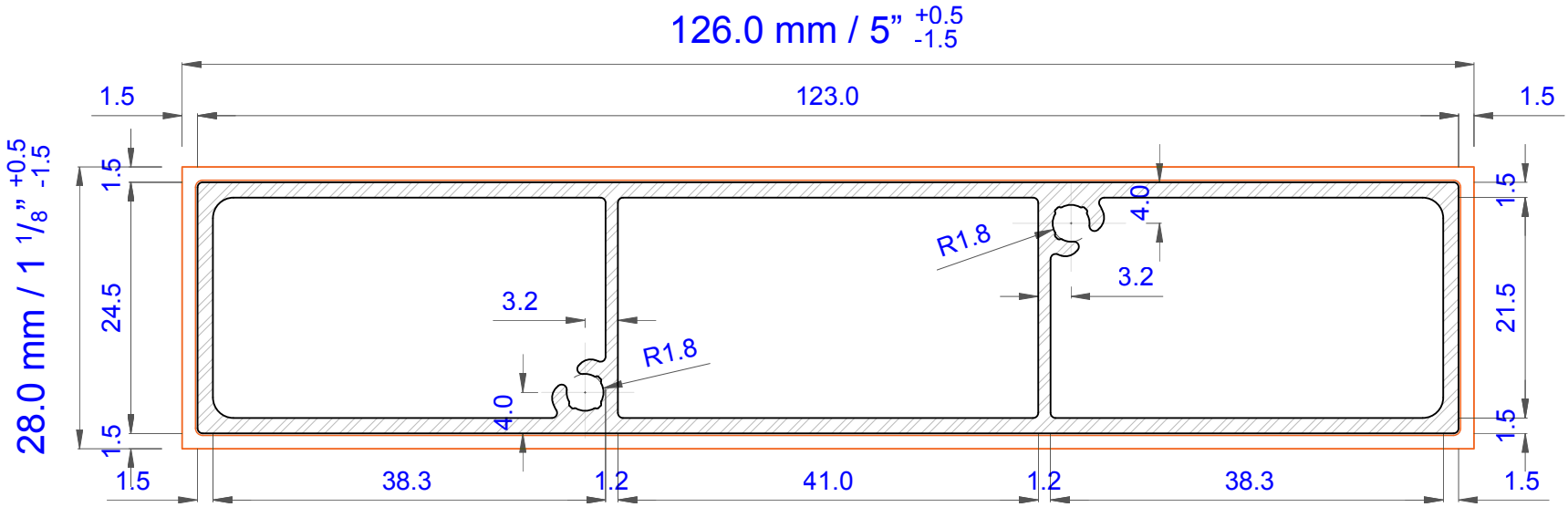

Technical specifications, dimensions in mm		Cross section coefficient Z+x (cm^3)	4.3	Wood hybrid system WHS	Type 1.0
Weight (kg/ml)	1.6	Cross section coefficient Z-x (cm^3)	4.3	**Soleo 6031**	Geolam www.geolaminc.com
Cross section, secondary moment Ix (cm^4)	5.3	Cross section coefficient Z+y (cm^3)	11.8		
Cross section, secondary moment Iy (cm^4)	72.6	Cross section coefficient Z-y (cm^3)	11.8		