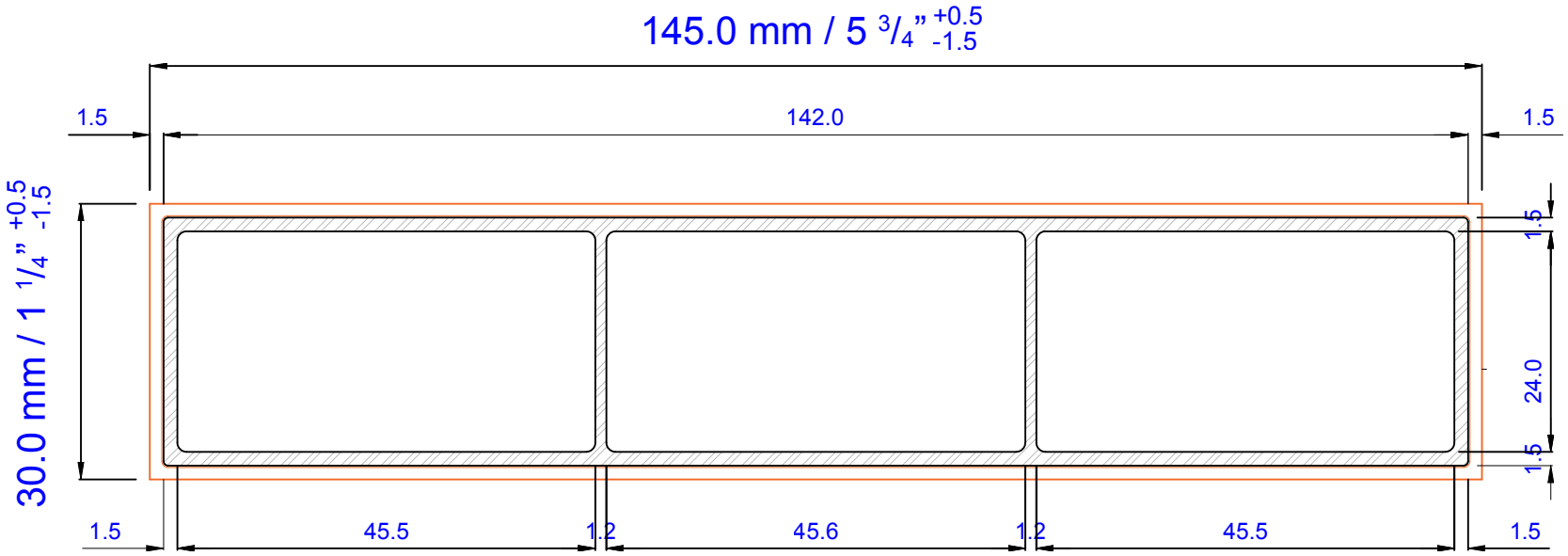

Technical specifications, dimensions in mm		Cross section coefficient Z+x (cm^3)	5.62	**Wood hybrid system WHS**	Type 1.0
Weight (kg/ml)	2.06	Cross section coefficient Z-x (cm^3)	5.62	**Soleo 6024**	Geolam www.geolaminc.com
Cross section, secondary moment Ix (cm^4)	7.59	Cross section coefficient Z+y (cm^3)	15.59		
Cross section, secondary moment Iy (cm^4)	110.67	Cross section coefficient Z-y (cm^3)	15.59		