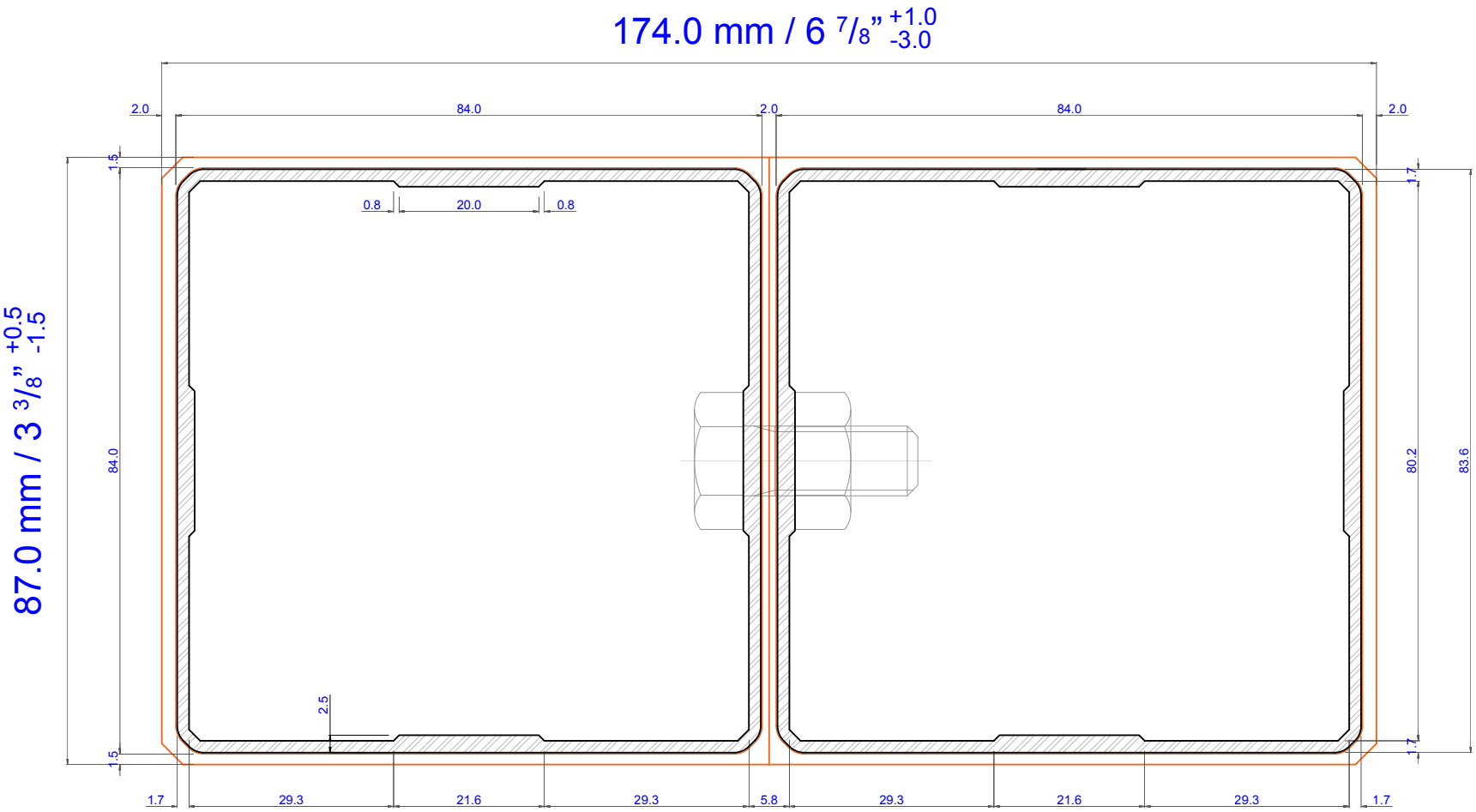

Technical specifications, dimensions in mm		Cross section coefficient Z+x (cm^3)	31.55	**Wood hybrid system WHS**	Type 1.0
Weight (kg/ml)	4.52	Cross section coefficient Z-x (cm^3)	31.55	**Planeo 4044**	Geolam® www.geolaminc.com
Cross section, secondary moment Ix (cm^4)	131.90	Cross section coefficient Z+y (cm^3)	42.31		
Cross section, secondary moment Iy (cm^4)	358.80	Cross section coefficient Z-y (cm^3)	42.31		